ALPHA MICROSYSTEMS
RIGHT. FROM THE START.

For Authorized Service Personnel Only:

Eagle 250 Service Manual

DSM-00223-00

FIRST EDITION: July 2000

To re-order this document, request part number DSO-00223-00

FCC Notice

This equipment has been tested and found to comply with the limits for a Class A digital device, pursuant to Part 15 of the FCC Rules. These limits are designed to provide reasonable protection against harmful interference when the equipment is operated in a commercial environment. This equipment generates, uses and can radiate radio frequency energy and, if not installed and used in accordance with the instruction manual, may cause harmful interference to radio communications. Operation of this equipment in a residential area is likely to cause harmful interference in which case the user will be required to correct the interference at his own expense.

Canadian Department of Communications Compliance Statement

This equipment does not exceed Class A limits per radio noise emissions for digital apparatus set out in the Radio Interference Regulations of the Canadian Department of Communications. Operation in a residential area may cause unacceptable interference to radio and TV reception requiring the owner or operator to take whatever steps are necessary to correct the interference.

Avis de Conformité aux Normes du Ministère des Communications du Canada

Cet équipment ne deapsse pas les limits de Classe A d'émission de bruits radioélectriques pour les appareils numeriques tels que prescrites par le Règlement sur le brouillage radioélectrique établi par le ministère des Communications du Canada. L'exploitation faite en milleu résidential peut entrainer le brouillage des réceptions radio et tele, ce qui obligerait le propriétaire ou l'opératour à pendre les dispositions nécessaires pour en éliminer les causes.

Battery Warning

CAUTION: Danger of explosion if battery is incorrectly replaced. Replace only with the same or equivalent type recommended by the manufacturer. Discard used batteries according to the manufacturer's instructions.
ATTENTION: Il y a danger d'explosion s'il y a replacement incorrect de la batterie. Remplacer uniquement avec une batterie du même type ou d'un type recommandé par le constructeur. Mettre au rébut les batteries usagées conformément aux instructions du fabricant.

For AM-3500-E100, -E200, -E300, -E400, -E500 and AM-990-01 systems replace battery with Panasonic or Ray-O-Vac BR2325 only. For AM-3500-E250, AM-3500-E450, E550, AM-3500-6000, AM-3500-7000, and AM-990-04 systems, replace batteries with Panasonic or Ray-O-Vac BR1225 only. Use of other batteries may present a risk of fire or explosion. Replacement batteries may be ordered from your authorized Alpha Micro reseller.

Safety Warning

This computer contains no user-configurable components that require opening the computer case. Because the power supply in this computer is capable of outputting high current levels hazardous to your safety, the computer case should only be opened by an authorized service technician.

Cet ordinateur ne contient aucune pièce configurable par l'utilisateur qui nécessite l'ouverture du boitier. L'alimentation de cet ordinateur peut preduire des nivaeux de tensions dangereux, le boitier ne devrait donc être ouvert que par un technician autoriaé.

SOFTWARE SECURITY DEVICE IDENTIFICATION NUMBER: _____

The Alpha Micro Software Security Device (SSD) is a customized integrated circuit that personalizes the computer, providing identity verification for it. Certain Alpha Micro and non-Alpha Micro software may require that your computer contain an SSD in order to run software that has been customized to run only on your computer.

Please enter the identification of your SSD above. The SSD identification number should be on your computer ID label under "SSD Serial No." (Another way of finding the number is to look at the SSD itself. The SSD is located in an integrated circuit location on the CPU board; its identification number is printed on the SSD itself.) Software vendors may ask you for the SSD number if they are customizing software to run only on your computer.

This document may contain references to products covered under the following U.S. Patent Number(s): 4,530,048

ALPHA MICROSYSTEMS
2722 S. Fairview Street
Santa Ana, CA 92704

Table of Contents

INTRODUCTION 1
OTHER EAGLE 250 DOCUMENTS 1
ACCESSING YOUR COMPUTER 1
ELECTRONIC EQUIPMENT HANDLING PRECAUTIONS 3
HARDWARE CONFIGURABLE OPTIONS 3
Printed Circuit Board Configuration 4
AM-138-10 Jumpers 6
AM-138-10 Connectors 7
Remote Reset Capability 8
Replacing the Time and Date Battery 8
SSD and PROM Chip Removal 9
AM-966-10 CONNECTIONS 10
Front Panel Display Wires for Upgrades 11
UPGRADING EAGLE 250 ON-BOARD MEMORY 11
Removing Memory SIMMs 12
Installing Memory 12
INSTALLING I/O BOARDS 14
PERIPHERAL MOUNTING 15
Additional Documentation 17

Table of Figures

Figure 1: Chassis Top Cover Screws 2
Figure 2: Chassis Top Cover Removal 2
Figure 3: Static Protection Wrist Strap 3
Figure 4: AM-138-10 Board 5
Figure 5: AM-138-10 Backup Battery Removal 9
Figure 6: SSD Chip Removal Tools 10
Figure 7: AM-966-10 Board Layout 10
Figure 8: AM-138-10 SIMM Module Installation 13
Figure 9: JP7 Memory Jumpers 13
Figure 10: Peripheral Bay Positions 16

INTRODUCTION

The instructions in this document are intended only for authorized service personnel. Eagle 250 computers contain a high-output power supply, which produces current levels high enough to make it unsafe for unauthorized persons to perform work inside the chassis.

This document describes the following procedures and topics for the Eagle 250 computer:

- Removing your computer's cover and electronic equipment handling precautions
- Hardware configuration options: jumpers and connectors on the AM-138-10 board, replacing the time/date battery, enabling remote reset, and replacing the SSD and PROM chips
- Connections to the AM-966-10 front panel display
- Installing memory
- Installing I/O boards
- Peripheral installation

OTHER EAGLE 250 DOCUMENTS

Besides this *Service Manual*, these other documents contain information on the Eagle 250:

- *Eagle 250 Owner's Manual*, DSO-00221-00: the end user's guide to daily operation and maintenance of the computer.
- *Eagle 250 Installation and Technical Manua*l, DSO-00222-00: technical specifications, configuration guidelines, and installation and software setup information. You should not begin any Eagle 250 component replacement or upgrade without this manual.
- *Upgrade Instructions: Eagle 100/200/300 to Eagle 250*, PDI-00138-15: detailed instructions for upgrading any of these computers with the AM-138-10 board to create an Eagle 250 computer.

All of these manuals are available on-line at our Web site, *www.amos-online.com*.

ACCESSING YOUR COMPUTER

When adding additional equipment or servicing your computer, you will need to remove your computer's top cover. The top cover is held in place with four Phillips-head screws on the computer's rear panel. To remove the top cover, remove all four screws from the locations indicated in Figure 1. Once the screws have been removed, you can slide back and remove the top cover, as shown in Figure 2. (Your computer's front panel may not look like the one in Figure 2—the cover removal procedure is still the same.)

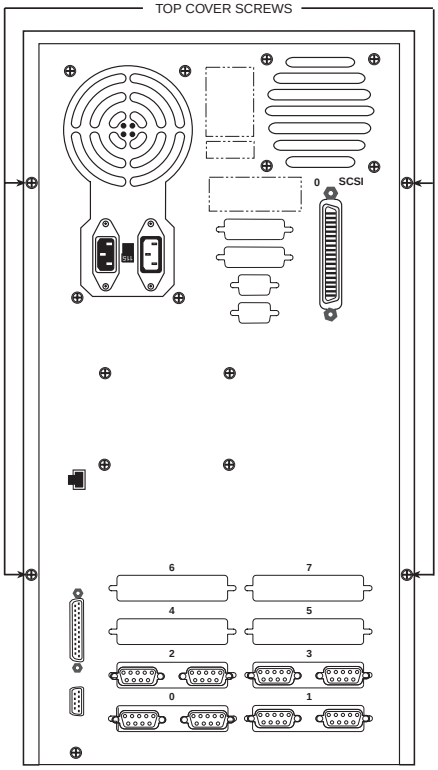

Figure 1: Chassis Top Cover Screws

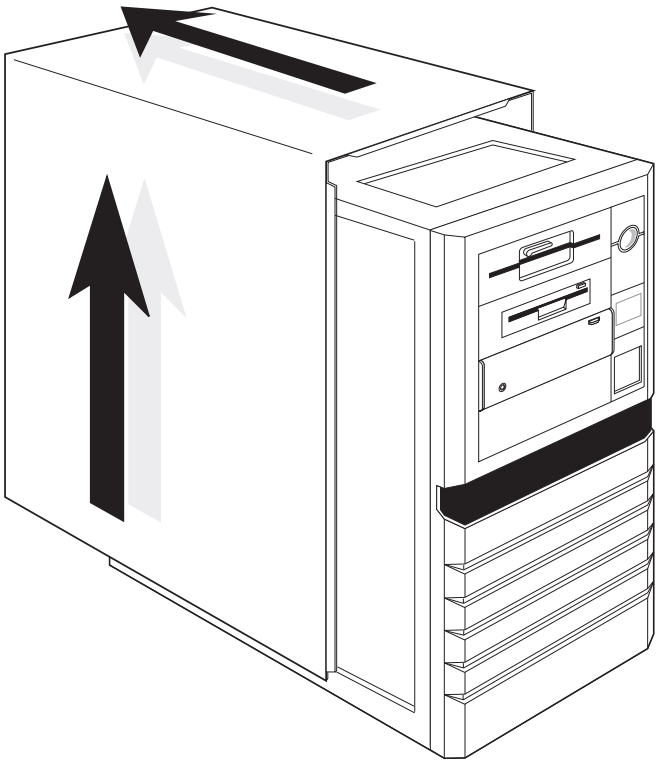

Figure 2: Chassis Top Cover Removal

ELECTRONIC EQUIPMENT HANDLING PRECAUTIONS

With the AC power cord unplugged and the top cover removed, the components inside your computer are vulnerable to damage caused by static discharge. Your body and clothing can store an electrical charge that can damage or destroy unprotected electronic components. Before handling any computer hardware, make sure your work area is properly protected against static discharge. There are a number of commercially available static protection devices, like the wrist strap shown in Figure 3, designed specifically to protect your equipment from harmful static discharge.

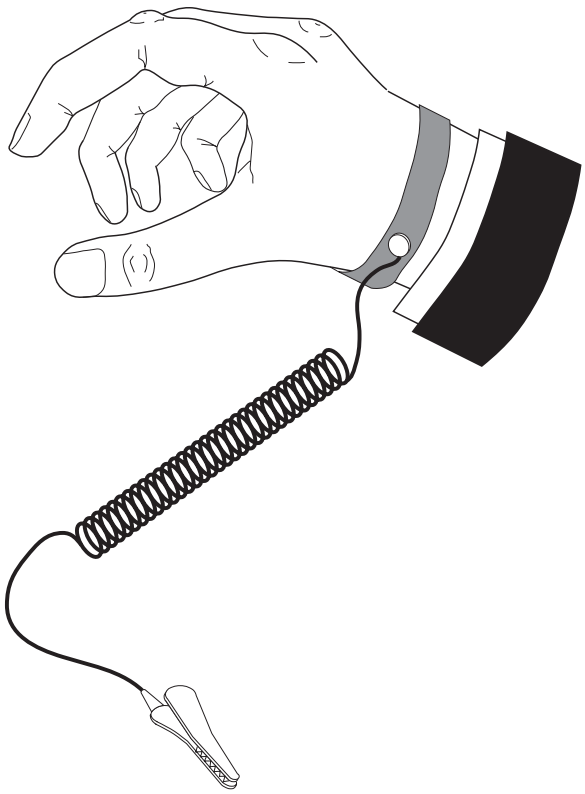

Figure 3: Static Protection Wrist Strap

HARDWARE CONFIGURABLE OPTIONS

The following sections show the jumpers and connectors on the AM-138-10 board, then describe the configuration options available to let you tailor your hardware to your needs. These options require access to the main circuit boards inside the computer, and should be performed only by qualified technical personnel. Contact your VAR if you need assistance.

Printed Circuit Board Configuration

The AM-138-10 board is shown in Figure 4. Your board has been factory tested and shipped with its configuration jumpers set in their standard default positions. There are only two areas on the board which may require you to change jumper settings:

- Memory size select (JP7)
- Enabling or disabling the supply of SCSI bus termination voltage (JP5)—default set at enabled.

All other jumpers should be left in their factory-installed positions. The jumper setting table following Figure 4 will help you check the board to make sure all jumpers are properly installed.

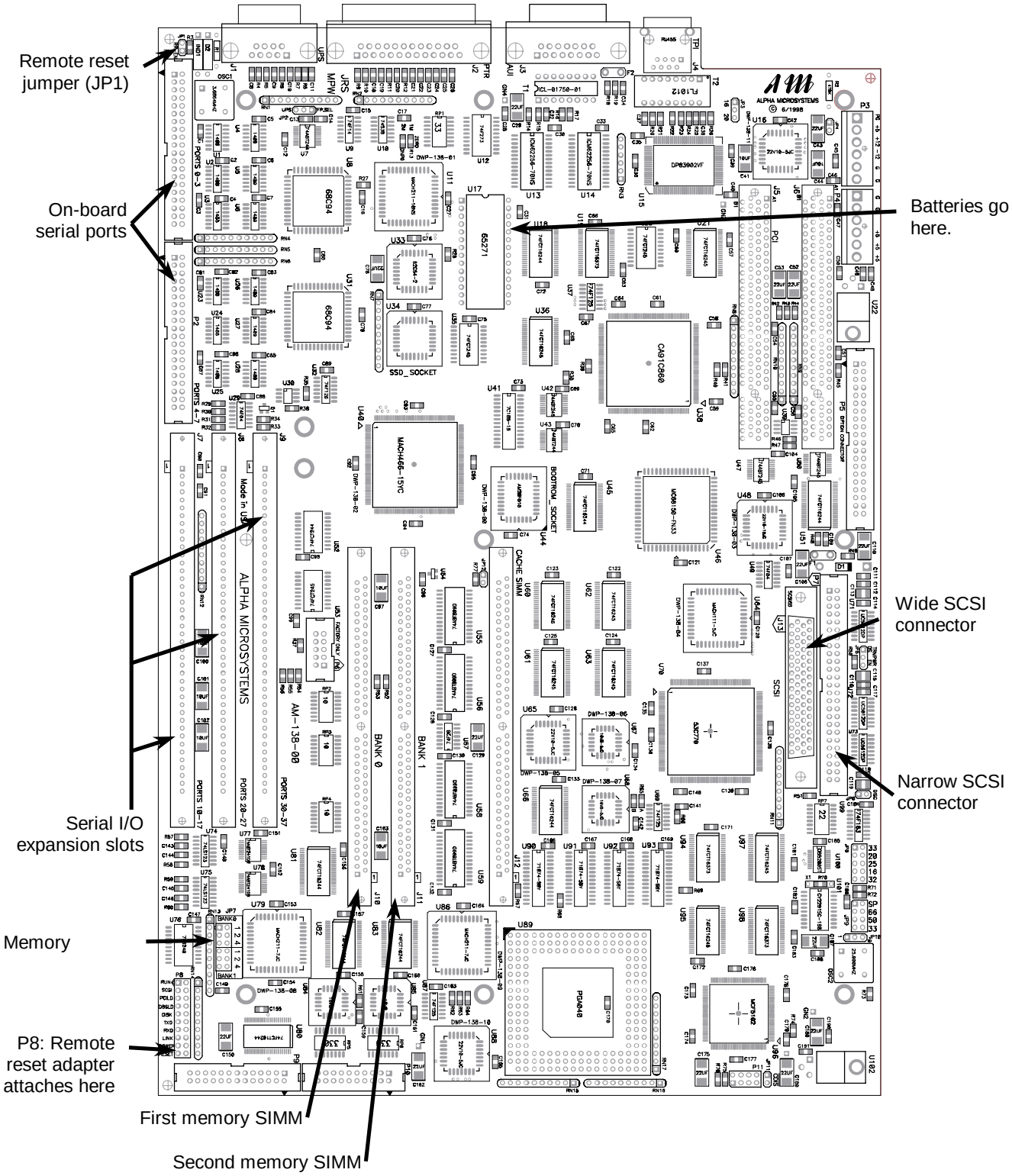

Figure 4: AM-138-10 Board

AM-138-10 Jumpers

Jumper Number	*Jumper Name*	*Default Setting*	*Notes*
JP1	RR-EN	out	When IN, enables remote reset through serial port 0 (this is not supported through AM-90 card); when out, allows remote reset cable attachment at P8. See page 8.
JP2	Level7 Select	UPS	3-pin jumper; set to two pins at UPS side. When set to FP, front panel Turbo switch enables Level7 diagnostic. Not user configurable.
JP3	20	IN	Ethernet bus clock select. Not user configurable.
	16	out	
JP5	TERMPWR	EN	SCSI bus termination voltage, EN = Enabled, DS = Disabled. User may change.
JP6	DISC	IN	Not user configurable
JP7	Memory Size Select	See Table 4.	Memory size configuration. ***Installer must configure.***
JP8	32	out	Not user configurable.
	16	out	
	25	out	
	20	out	
	33	IN	
JP9	33	out	Not user configurable.
	50	out	
	66	IN	
	SP	out	

Table 1: Jumper Configuration for the AM-138-10 Board

AM-138-10 Connectors

The following table provides a brief overview of the connectors on the AM-138-10 board.

Connector Number	*Connector Name*	*Connector Type*	*Cable Description and How to Use*
J1	UPS	9-pin	Cable pin-1 up, use keyed cable
J2	Parallel port	25-pin	Cable pin-1 up, use keyed cable
J4	Ethernet	TPI	RJ-45. Cannot use both this and J3.
J7	Ports 10-17	42-pin	Serial expansion
J8	Ports 20-27	42-pin	Serial expansion
J9	Ports 30-37	42-pin	Serial expansion
J10	Bank 0	SIMM	First memory SIMM
J11	Bank 1	SIMM	Second memory SIMM
J13	SCSI-2 Wide	68-pin	Cable pin-1 down, use keyed cable. Cannot use both this and P7.
P1	Ports 0 - 3	40-pin	First four on-board ports
P2	Ports 4 - 7	40-pin	Second four on-board ports
P3	Power	Molex	For +5V, +12V, -12V and GND
P4	Power	Molex	For +5V and GND
P5	Option Connector		FOR FUTURE USE
P6	Program		FOR FACTORY USE ONLY
P7	SCSI-2	50-pin	Cable pin-1 down, use keyed cable. Cannot use both this and J13.
P8	Run	2-pin	Run light if using 20-pin front panel display at P10
	Disk	2-pin	Disk activity light if using 20-pin front panel display at P10
	Power	2-pin	Power light if using 20-pin front panel display at P10
	Reset	2-pin	Optionally, connect PDB-10323-00 to inner pin.
P9		26-pin	Front panel status display (AM-966-10)
P10		20-pin	Front panel status

Table 2: AM-138-10 Connectors

Remote Reset Capability

The AM-138-10 board has an option to enable remote hardware reset, either through serial port 0, or by using the Remote Reset Adapter, PDB-10323-00.

You cannot use remote reset through port 0 if port 0 uses an AM-90 card for its back panel connection; the AM-90 does not support this feature. If you use an AM-90, which is optional on newly-purchased Eagle 250s and recommended for upgrades, you must use the Remote Reset Adapter if you want remote reset ability.

To enable remote reset through serial port 0, you must do two things:

1. Install the JP1 jumper. The factory default is not installed.
2. Connect a push-button switch between pin-1 and pin-7 (signal ground) at the terminal end of the terminal cable attached to serial port 0.

Once you've enabled remote reset, you can reset the computer by activating the push-button switch.

The remote reset adapter allows you to reboot the computer from anywhere in your facility by wiring an external switch to the location you want. To install the remote reset adapter, follow the instructions in PDI-10323-00. The JP1 jumper must ***not*** be installed. Attach the adapter's single-wire connector to the connector labeled RESET at location P8. Attach it to the pin away from the edge of the board.

Replacing the Time and Date Battery

When replacing the backup batteries, always be sure to power-down the system first! DO NOT replace the batteries with the power on! As always when opening your computer chassis, take proper precautions against electrostatic discharge, which can seriously damage system components.

The AM-138-10 board uses two 3-volt lithium batteries (BR-1225) to provide power to its time/date circuit. The batteries are no bigger than a dime (1.2 cm), and are secured side-by-side in a plastic holder at location U17, as shown in Figure 5.

The batteries need to be replaced when the status panel displays B1 or B0. You must replace ***both*** batteries at the same time. For battery replacement, please follow these steps:

Before turning off your computer, write down the current CMOS settings. Removing the batteries will erase all CMOS data.

1. Insert a knife with a thin blade (such as a small scribe or Xacto™ knife) from the top, down through the square hole between the right edge of the battery and the plastic holder's top piece. (The right side is the side toward C31.)
2. Gently pry the right side of the battery so it slides to the left and pushes against the left side spring contacts.
3. As you slide the battery to the left and it clears the plastic top hole, pry the right edge of the battery upward and out through the hole in the top. The battery will typically "pop" up and out.

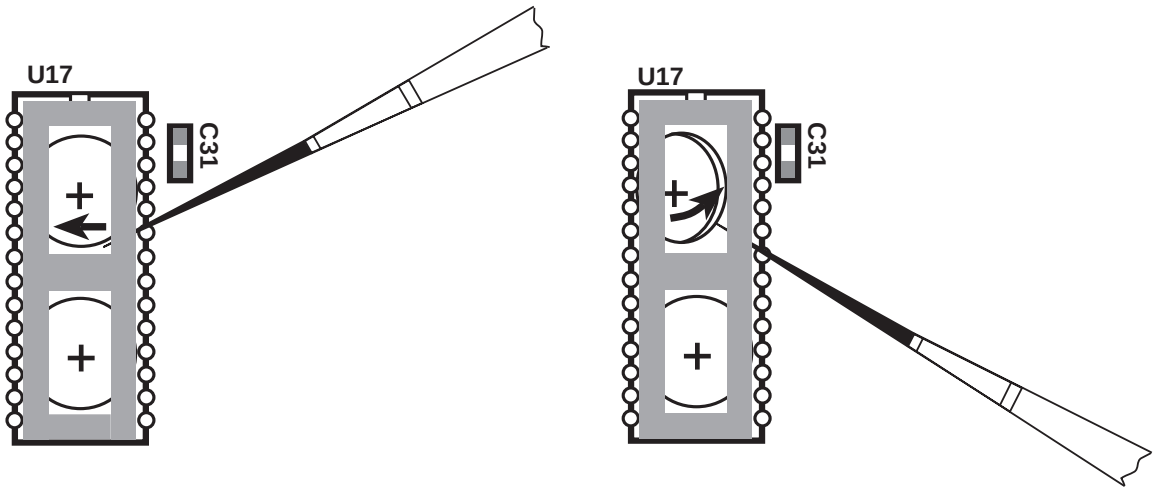

Figure 5: AM-138-10 Backup Battery Removal

4. Inspect the battery contacts and be sure they are clean before installing the new batteries. Use alcohol and a cotton swab to clean them, if necessary.
5. To install a new battery, insert the edge of the battery down through the square hole and under the left side of the plastic top. Be sure to install the new batteries with the (+) positive side up.
6. Use your finger to slide the battery to the left and down, until the right edge of the battery slips under the right side of the plastic top. Release the battery and it should spring to the right, securing itself under the holder's top piece.

Restoring Your CMOS Settings

The AM-138-10's batteries also maintain the boot routine data stored in its CMOS chip. Therefore, when you replace the batteries, your CMOS settings will be lost. After you install the new batteries and turn system power on, you need to access the CMOS Configuration menu and restore your settings. Refer to the *Eagle 250 Installation and Technical Manual* for detailed instructions.

If you do not use the CMOS configuration menu to restore your settings, the system will drop into a standard default boot routine: it will look first for a warm-boot streamer tape on SCSI device ID 3, then for AMOS32.MON and AMOS32.INI on SCSI disk drive 0.

Once the system is up and running, log to OPR: and enter the current time and date. Reboot the system to initialize the system up time.

SSD and PROM Chip Removal

The type of socket used for the boot PROM and SSD chips in your Eagle 250 requires a special tool for chip removal. If you ever need to remove and replace either of these chips, be sure to use the correct tool, as shown in Figure 6.

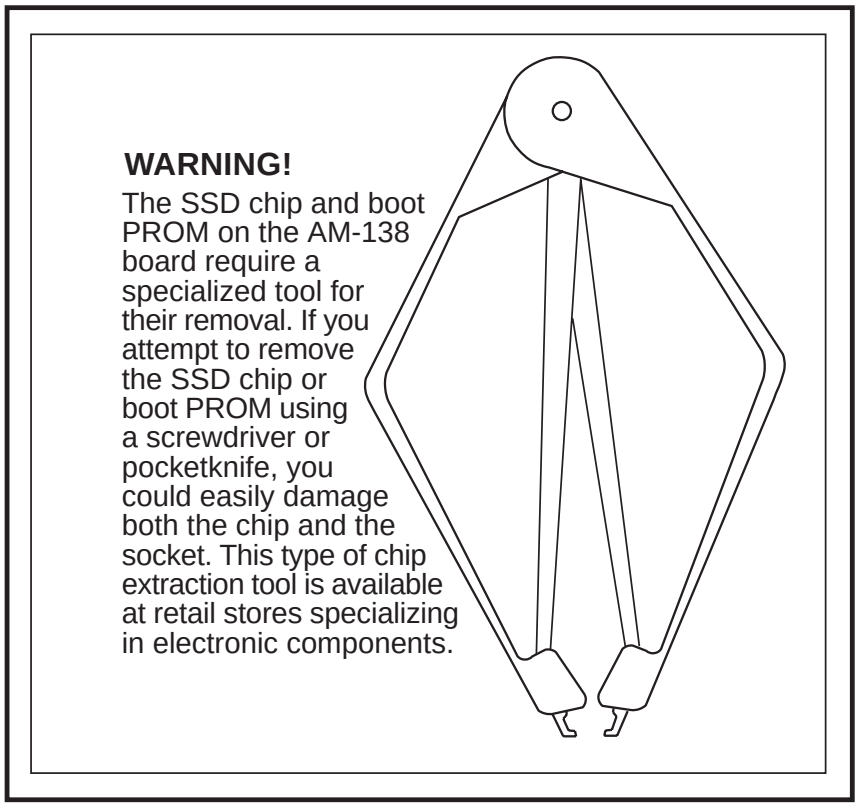

Figure 6: SSD Chip Removal Tools

AM-966-10 CONNECTIONS

The Eagle 250 uses the AM-966-10 front panel display board, which connects to the AM-138-10. In most cases, you should not need to connect any wires to or disconnect any wires from the AM-966. However, if any of your front panel display lights stop working, or if one or more wires come loose from the AM-966, you can refer to the picture and list below to check and, if necessary, remake any connections.

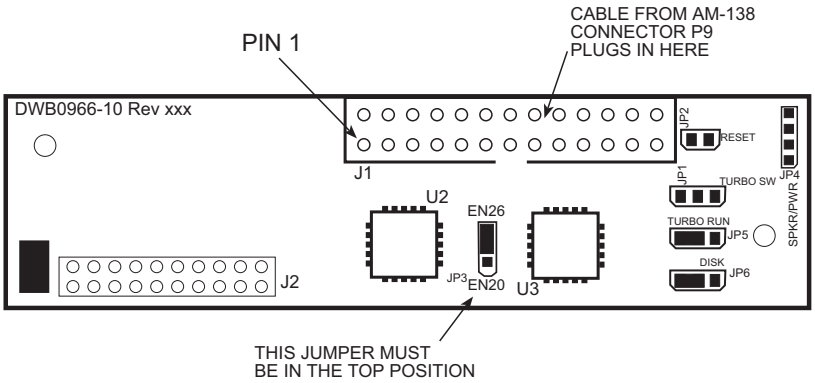

Figure 7: AM-966-10 Board Layout

The AM-966-10 board uses the following connections and jumpers:

Location	Description	Wire Order*
J1	26-pin cable to AM-138-10. Notice pin 1 orientation on Figure 7.	
JP1	Connects to Turbo switch.	Black-yellow-white
JP2	Connects to Reset switch.	Green-black or black-green
JP3	In an Eagle 250, this jumper must be on the upper two pins (those closest to J1).	
JP4	To speaker and front panel power.	Red-black
JP5	Connects to system activity (Turbo) light. Place connector on left two pins (white goes on center pin).	Yellow-white
JP6	Connects to disk activity (H.D.D.) light. Place connector on left two pins (white goes on center pin).	Red-white

Table 3: AM-966-10 Connectors

* Wires should be in this order, from top to bottom or left to right, depending on jumper orientation. In some cases, wires may be reversed; if connection doesn't work in this orientation, try reversing the connector.

If all front panel lights stop working, check the JP4 connection first. If it is loose, none of the lights will work.

Front Panel Display Wires for Upgrades

Computers which were upgraded to an Eagle 250 from older Eagle computers may not use the AM-966-10. If not, the 20-pin connector from the front panel attaches at P10, and additional front panel wires attach at P8 as indicated:

Board Label	Wires	Purpose/Notes
Run	Yellow/White	Run light; white wire goes toward edge of board.*
Disk	Red/White	Disk activity light; white wire toward edge.*
Power	Green/White	Power light; white wire toward edge*
Reset	Green/Black	Reset switch

UPGRADING EAGLE 250 ON-BOARD MEMORY

The AM-138-10 has two on-board SIMM (single inline memory module) expansion slots, which support 60ns DRAMs; you can install either one or two memory SIMMs. Because the memory is located on-board, it can be accessed much faster than memory accessed over the VME bus—i.e., AM-730 and AM-740 memory boards used with earlier CPU boards.

The following procedures describe how to remove and install the memory SIMMs, and set the memory size jumpers.

Removing Memory SIMMs

To remove a memory SIMM from its connector:

1. Power down the computer. Remove the chassis cover and access the AM-138-10 board.
2. Press out on the metal retainer clips and gently tilt the top of the SIMM module, so it is free of the metal retainer clips.
3. Lift the SIMM out of the connector

Installing Memory

The Eagle 250 supports from 4MB to 256MB of main memory: either one or two memory SIMMs of 4MB, 8MB, 16MB, 32MB, 64MB, or 128MB. Use 60ns SIMMs only; **70ns SIMMs will not work**. SIMMs do not have to be installed in pairs: you can use either one or two SIMMs; if you use two, they do not have to be of equal size. For example, you can install one 32MB SIMM and one 16MB SIMM for a total of 48MB of memory.

The memory SIMMs install in connectors J10 and J11. See Figure 4 for the location of these connectors. If you're installing only one SIMM, it goes in J10. If you're installing two SIMMs of unequal capacity, the larger one goes in J10.

To install memory expansion SIMMs on the AM-138-10 board, use this procedure:

1. Insert one SIMM (the larger if the SIMMs aren't of equal capacity) in connector J10. Align pin-1 at the notched end of the SIMM module with pin-1 on the connector, as in Figure 8.
2. Insert the SIMM module into the connector at a slight angle.

   Rotate into the upright position.

   The SIMM will engage the metal retainer clips and click into position, locking the SIMM in place.
3. If you are using two SIMMs, repeat steps 1 and 2 for the second one, at connector J11.

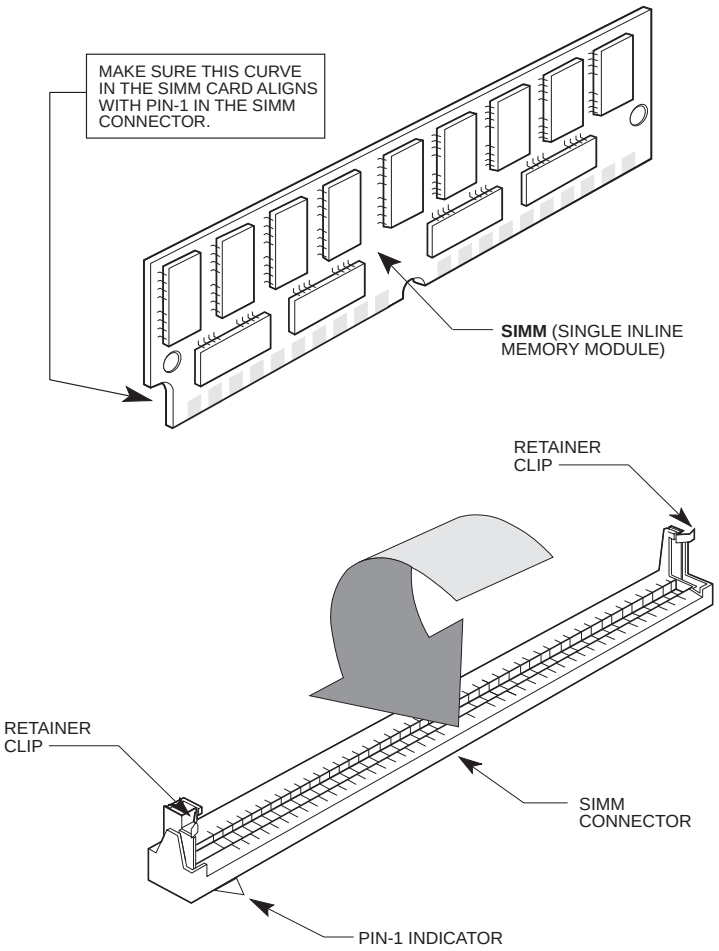

Figure 8: AM-138-10 SIMM Module Installation

Setting Memory Jumpers

After installing the SIMMs, set the jumpers at location JP7 on the AM-138-10 board according to the table below. As you turn on the computer, AMOS will automatically make the memory available. See Figure 4 for the location of the JP7 jumpers.

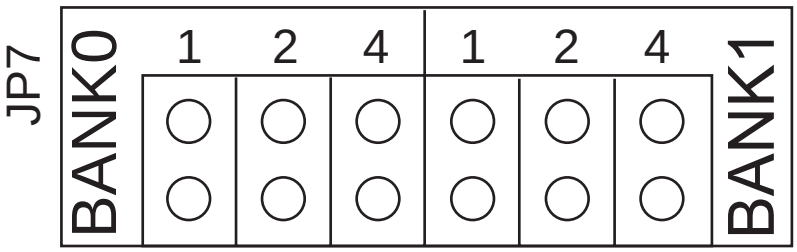

Figure 9: JP7 Memory Jumpers

The Bank 0 jumpers apply to the SIMM in J10; the Bank1 jumpers apply to the SIMM, if any, in JP11. The correct jumper settings for each possible memory combination are shown in Table 4, below.

Memory Module Size Combinations:	*Total Memory*	*Bank0 Settings*			*Bank1 Settings*		
		1	*2*	*4*	*1*	*2*	*4*
4MB	4MB	X	X	X	O	O	O
2 x 4MB	8MB	X	X	X	X	X	X
8 MB	8 MB	O	X	X	O	O	O
8MB + 4MB	12MB	O	X	X	X	X	X
2 x 8MB	16MB	O	X	X	O	X	X
16MB	16MB	X	O	X	O	O	O
16MB + 4MB	20MB	X	O	X	X	X	X
16MB + 8MB	24MB	X	O	X	O	X	X
2 x 16MB	32MB	X	O	X	X	O	X
32MB	32MB	O	O	X	O	O	O
32MB + 4MB	36MB	O	O	X	X	X	X
32MB + 8MB	40MB	O	O	X	O	X	X
32MB + 16MB	48MB	O	O	X	X	O	X
2 x 32MB	64MB	O	O	X	O	O	X
64MB	64MB	X	X	O	O	O	O
64MB + 4MB	68MB	X	X	O	X	X	X
64MB + 8MB	72MB	X	X	O	O	X	X
64MB + 16MB	80MB	X	X	O	X	O	X
64MB + 32MB	96MB	X	X	O	O	O	X
2 x 64MB	128MB	X	X	O	X	X	O
128MB	128MB	O	X	O	O	O	O
128MB + 4MB	132MB	O	X	O	X	X	X
128MB + 8MB	136MB	O	X	O	O	X	X
128MB + 16MB	144MB	O	X	O	X	O	X
128MB + 32MB	160MB	O	X	O	O	O	X
128MB + 64MB	192MB	O	X	O	X	X	O
2 x 128MB	256MB	O	X	O	O	X	O

X = Jumper installed; O = Jumper not installed

Table 4: AM-138-10 Memory Module Jumper (JP7) Settings

INSTALLING I/O BOARDS

I/O boards containing additional serial ports plug into the connectors at J7, J8, and J9 on the AM-138-10. As discussed in the *Eagle 250 Installation and Technical Manual*, you should add boards starting with J7 and working up to J9. For detailed installation instructions for any serial I/O board, please refer to the

documentation accompanying the board. This section merely contains some cautions and issues to keep in mind when adding a serial I/O board to an Eagle 250 computer.

The plastic connectors on the AM-138-10 are fragile, and can break if you are not careful when removing or installing I/O boards. To minimize the chance of damage:

- Never apply excessive pressure or attempt to force a board into the connector. If aligned properly, the board should install easily.
- Attach the cable that will go from the I/O board to the back panel before you insert the board into the connector on the AM-138-10. Attaching the cable after the board is installed puts a sideways pressure on the connector and could crack it.
- Similarly, do not unplug the cable to the back panel while the board is in the connector. Carefully remove the board from the connector, then unplug the cable.

Most Eagle 250s include a small brace designed to support the I/O boards and prevent damage during shipping. You can adjust this brace for the number of I/O boards currently in the computer. We recommend you leave the brace in place to help prevent possible damage if the computer is jostled or moved. See PDI-20791-00, *Notice: Shipping Brace for I/O SIMM Boards*, for instructions on removing and adjusting the brace.

PERIPHERAL MOUNTING

Your Eagle 250 computer can hold six half-height peripherals, in three 3.5” and three 5.25” mounting bays. One of the 3.5” bays and all of the 5.25” bays are accessible through the computer’s front panel after you remove the appropriate filler panels.

3.5" hard disk drives can be mounted in the 5.25" bays using special mounting brackets. The 3.5” SCSI floppy drive requires a 5.25” mounting bay.

Figure 10 shows all six peripheral mounting positions.

We ***strongly*** recommend turning off system power before attaching or detaching any SCSI peripheral. Attaching any device, internal or external, while there may be activity on the bus can severely damage the peripheral or the SCSI controller.

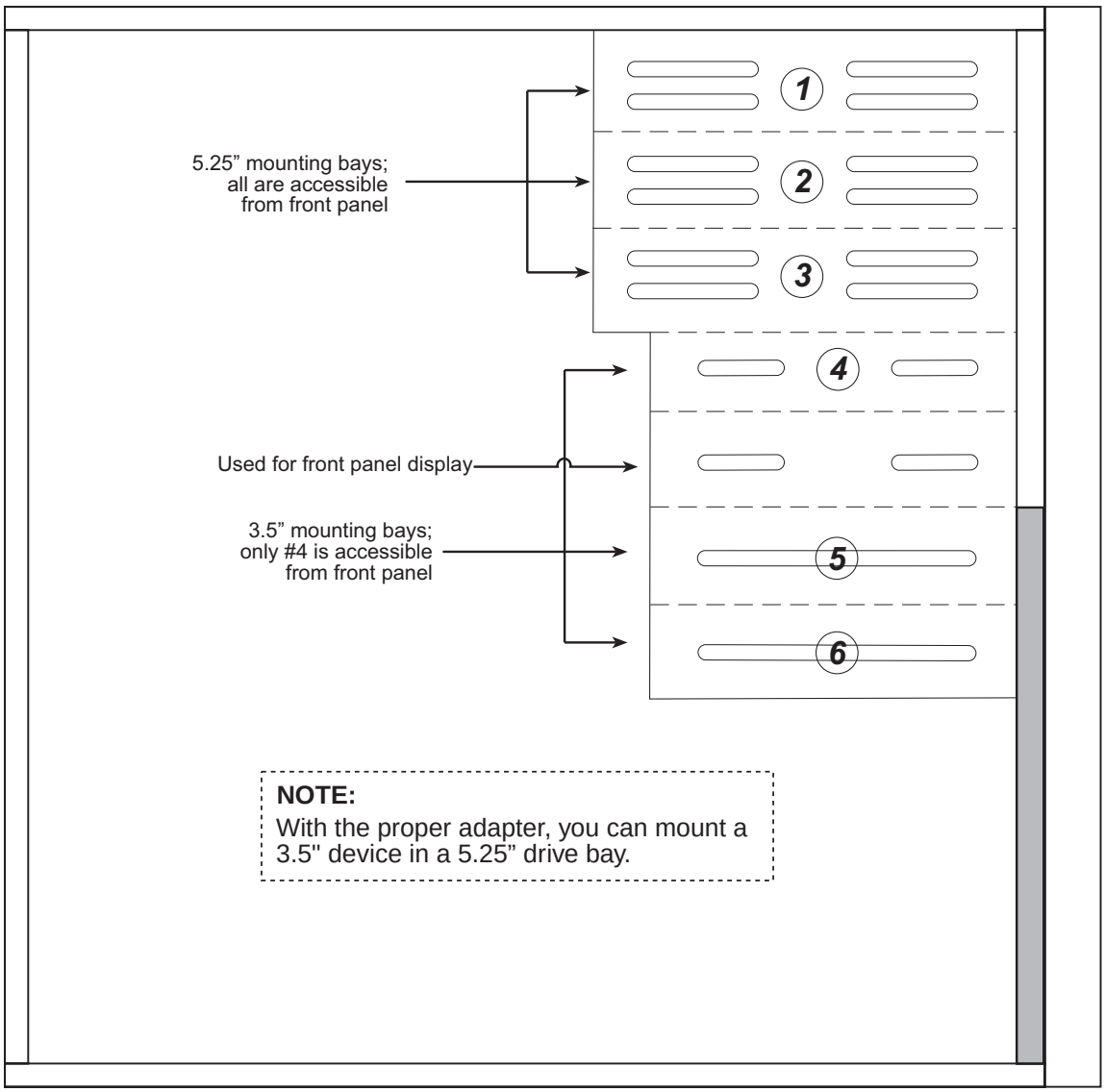

Figure 10: Peripheral Bay Positions

The following paragraphs give general instructions for mounting peripherals in the Eagle 250 cabinet. For detailed instructions on configuring a particular device, see the installation instructions shipped with that device.

A peripheral is installed in a drive bay using four Phillips-head screws. To install the screws, you need access to both sides of the drive bay. On one side of the cabinet, all six of the bays are easily accessible. However, on the other side, the AM-138-10 mounting panel blocks access to all but the top two bays. To ease the installation process, Alpha Micro installs peripherals starting at the top and working down. If your computer includes one disk drive and one tape drive, the two peripherals will be in bays 1 and 2, which are easily accessible from both sides of the chassis.

To install peripherals in bays 3 through 6, you need to remove the mounting panel from the right side of the chassis (looking from the front). To install peripherals in these locations:

1. Since the AM-138-10 is attached to the panel, you need to detach it from the computer's back panel before removing the mounting panel. Remove the screws near the UPS status port and parallel port on the back panel.
2. Remove the two Phillips-head screws attaching the mounting panel to the chassis.

   Notice how the panel is positioned over the two alignment tabs on the bottom of the chassis. When you reinstall the panel, you must make sure it is properly positioned over both tabs; if not, you won't be able to reinstall the two screws.
3. Move the panel forward slightly so the AM-138-10 connectors clear the back panel, then tilt the top of the panel away from the chassis and remove it.
4. With the mounting panel out of the way, you can access both sides of the peripheral mounting bracket and have complete access to all six drive bays.
5. To install a peripheral, simply slide it into one of the available bays and install the four screws (two on each side) that hold the device in place.
6. Don't forget to attach the appropriate power and interface cables to your new peripheral.
7. After you have completed your peripheral installation, you can reinstall the side mounting panel and AM-138-10 by reversing the steps above.

The mounting panel is an integral part of the chassis assembly. With it removed, the chassis may shift slightly, either forward or backward. To reinstall the panel, you can realign the chassis by placing one hand on the top of the chassis and applying pressure either forward or backward. With the chassis properly aligned, the panel will slide into place.

Additional Documentation

Each peripheral device sold by Alpha Micro is covered by its own set of installation instructions. The installation instructions include information on jumper settings, termination, and cabling. Before installing a peripheral, make sure you read the documentation pertaining to the device.

If the documentation was not included with your peripheral device, it is probably contained on the AlphaCD which is distributed to all Alpha Micro Value Added Resellers on a periodic basis, and on our Web site at *www.amos-online.com*.